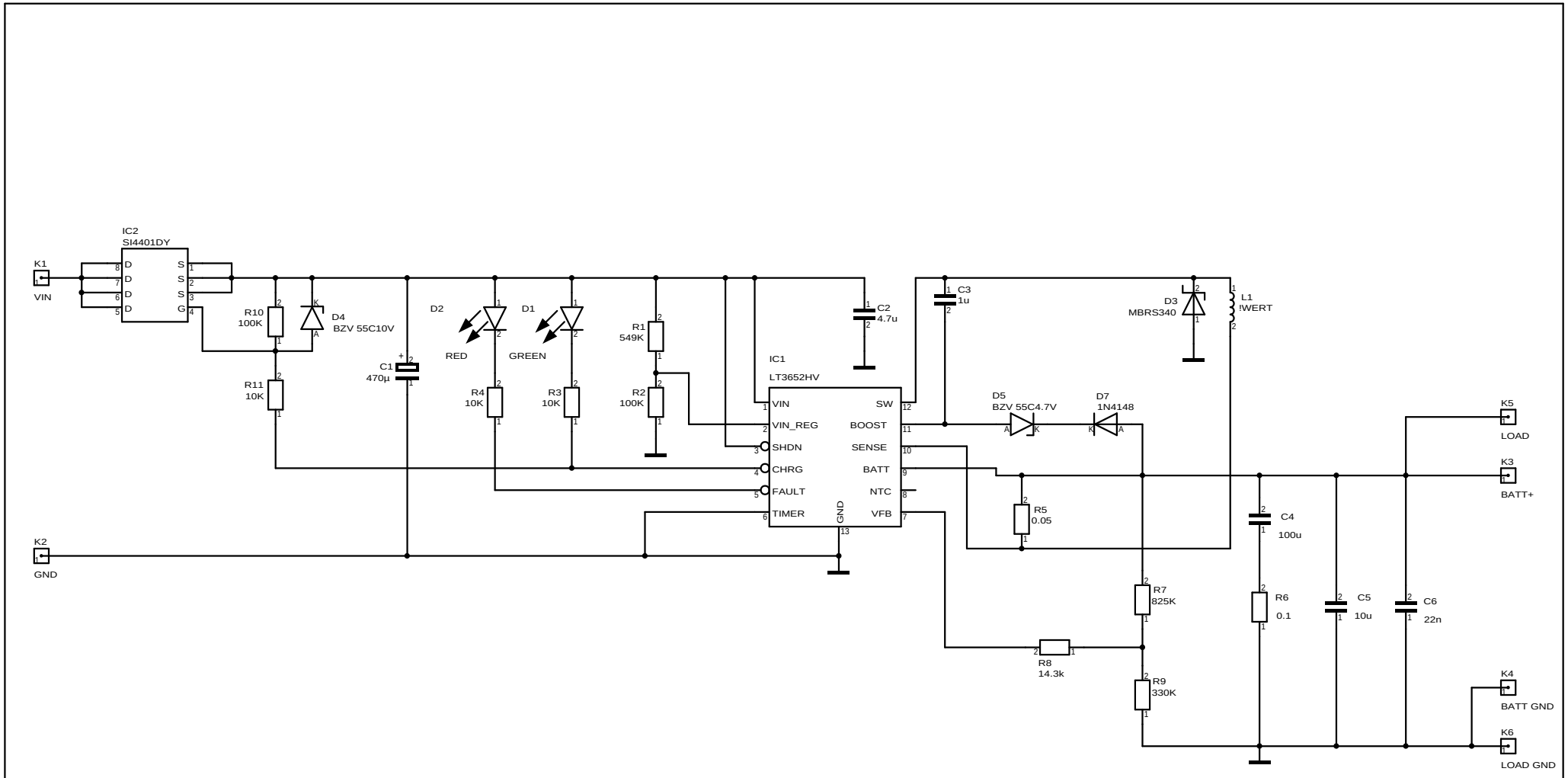

Scale 100,00%	File LT3652_MPPT_v3.T3001	Drawer	Sheet 1	Issue
Last Change 24.09.12 10:10		Titel MPPT Solar Charger Input 18V, Output 14.2V/2A		
Output 29.03.14 18:26				
Company www.mictronics.de		Project		