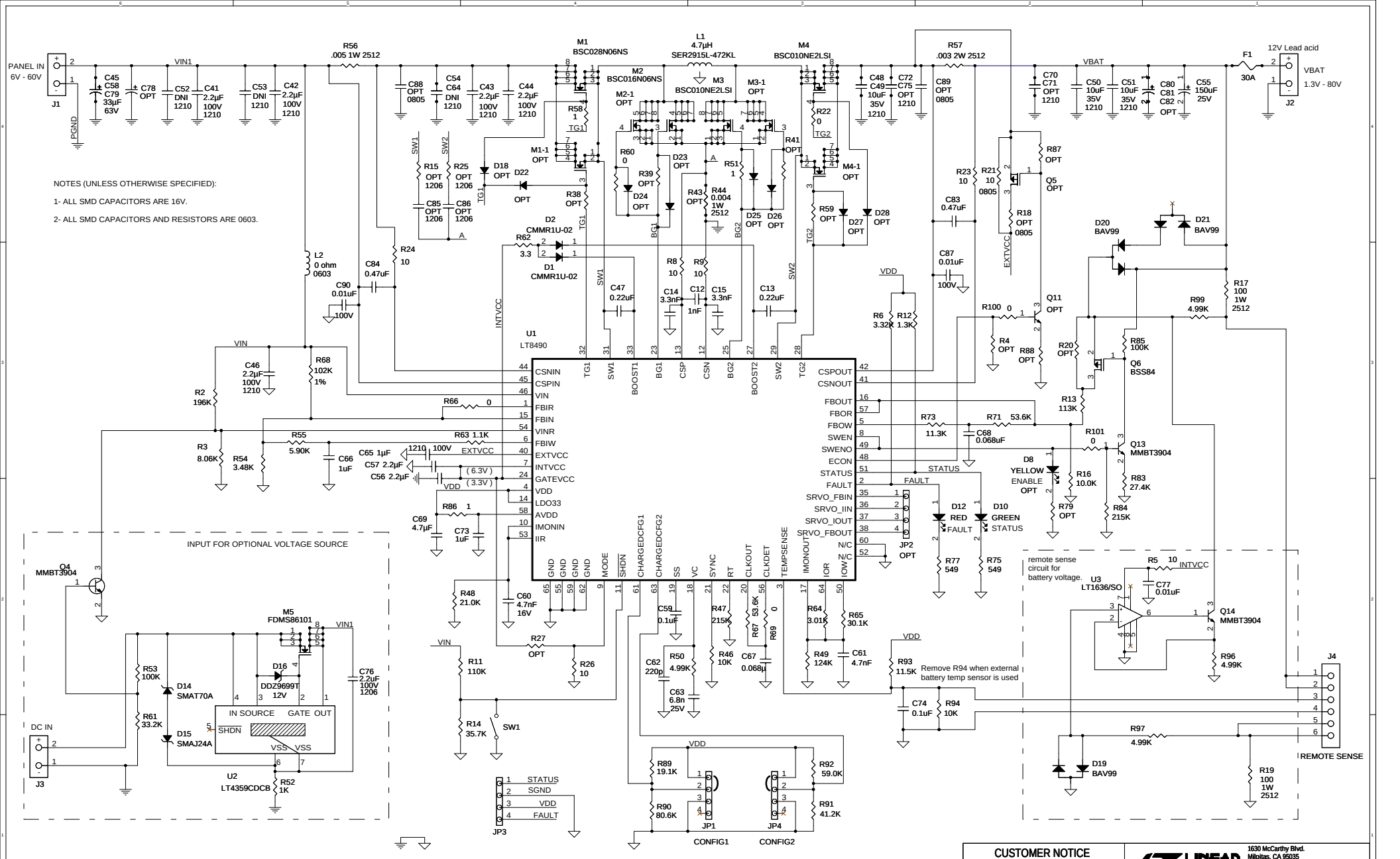
PANEL IN
6V - 60V
J1
PGND
VIN1
R56
.005 1W 2512
M1
BSC028N06NS
M2
BSC016N06NS
L1
4.7µH
SER2915L-472KL
M3
BSC010NE2LSI
M4
BSC010NE2LSI
R57
.003 2W 2512
VBAT
F1
30A
12V Lead acid
VBAT
1.3V - 80V
J2
NOTES (UNLESS OTHERWISE SPECIFIED):
1- ALL SMD CAPACITORS ARE 16V.
2- ALL SMD CAPACITORS AND RESISTORS ARE 0603.
U1
LT8490
INPUT FOR OPTIONAL VOLTAGE SOURCE
Q4
MMBT3904
M5
FDMS86101
D14
SMAT70A
D15
SMAJ24A
D16
DDZ9699T
12V
IN SOURCE
GATE
OUT
SHDN
VSS
U2
LT4359CDCB
DC IN
J3
STATUS
SGND
VDD
FAULT
JP3
CONFIG1
CONFIG2
JP1
JP4
JP2
D12
RED
FAULT
D10
GREEN
STATUS
D8
YELLOW
ENABLE
OPT
remote sense
circuit for
battery voltage.
U3
LT1636/SO
Q14
MMBT3904
Remove R94 when external
battery temp sensor is used
REMOTE SENSE
J4
Q11
OPT
Q13
MMBT3904
Q6
BSS84
Q5
OPT
D20
BAV99
D21
BAV99
D19
BAV99
CUSTOMER NOTICE
LINEAR TECHNOLOGY HAS MADE A BEST EFFORT TO DESIGN A CIRCUIT THAT MEETS CUSTOMER-SUPPLIED SPECIFICATIONS; HOWEVER, IT REMAINS THE CUSTOMER'S RESPONSIBILITY TO VERIFY PROPER AND RELIABLE OPERATION IN THE ACTUAL APPLICATION. COMPONENT SUBSTITUTION AND PRINTED CIRCUIT BOARD LAYOUT MAY SIGNIFICANTLY AFFECT CIRCUIT PERFORMANCE OR RELIABILITY. CONTACT LINEAR TECHNOLOGY APPLICATIONS ENGINEERING FOR ASSISTANCE.
THIS CIRCUIT IS PROPRIETARY TO LINEAR TECHNOLOGY AND SUPPLIED FOR USE WITH LINEAR TECHNOLOGY PARTS.
LINEAR TECHNOLOGY
1630 McCarthy Blvd.
Milpitas, CA 95035
Phone: (408)432-1900 www.linear.com
Fax: (408)434-0507
LTC Confidential-For Customer Use Only
TITLE: SCHEMATIC
HIGH EFFICIENCY MPPT
BATTERY CHARGER CONTROLLER
SIZE N/A
IC NO. LT8490
DEMO CIRCUIT 2069A
REV. 4
DATE: Wednesday, March 19, 2014
SHEET 1 OF 1